0. Name (2 pts):

AME 3623: Embedded Real-Time Systems

Midterm Exam

March 12, 2008

General instructions:

- This examination booklet has 12 pages.
- Do not forget to write your name at the top of the page and to sign your name below.
- The exam is closed book, closed notes, and closed electronic device. The exception is that you may have one page of your own notes.
- The exam is worth a total of 100 points (and 10% of your final grade).
- Explain your answers clearly and concisely. Do not write long essays (even if there is a lot of open space on the page). A question worth 5 points is only worth an answer that is at most 2 sentences.
- You have 1.25 hours to complete the exam. Be a smart test taker: if you get stuck on one problem go on to the next. Don't waste your time giving details that the question does not request. Points will be taken off for answers containing excessive or extraneous information.
- Show your work. Partial credit is possible, but only if you show intermediate steps.

Problem	Topic	Max	Grade
0	Name	2	
1	Digital Logic	30	
2	Number Systems	15	
3	Sequential Logic	15	
4	Memory	15	
5	Microcontrollers	25	
Total			

On my honor, I affirm that I have neither given nor received inappropriate aid in the completion of this exam.

Signature: _____

Date: _____

1. **Digital Logic** (30 pts)

Given the following circuit:

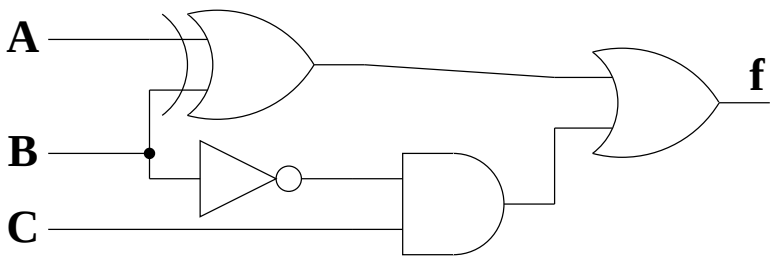

(a) (8 pts) Show the corresponding truth table.

A	B	C	f
0	0	0	
0	0	1	
0	1	0	
0	1	1	
1	0	0	
1	0	1	
1	1	0	
1	1	1	

Given the following truth table:

A	B	C	f
0	0	0	1
0	0	1	0
0	1	0	1
0	1	1	0
1	0	0	1
1	0	1	0
1	1	0	0
1	1	1	0

(b) (5 pts) Give the "minterm" form of the corresponding algebraic expression.

(c) (7 pts) Derive a simplified algebraic description for f. Justify each step (provide the name of the rule that you are using).

(d) (5 pts) Draw the corresponding circuit.

Given the following truth table:

A	B	C	f
0	0	0	1
0	0	1	1
0	1	0	1
0	1	1	1
1	0	0	1
1	0	1	1
1	1	0	0
1	1	1	1

(e) (5 pts) Give the reduced circuit (and yes, this is only worth 5 pts).

2. **Number Systems** (15 pts)

(a) (5 pts) What is the binary equivalent of $0xB3$? Show your work.

(b) (5 pts) What is the decimal equivalent of $0x3E$? Show your work.

(c) (5 pts) What is the binary equivalent of decimal number 129? Show your work.

3. **Sequential Logic** (15 pts)

Given the following circuit:

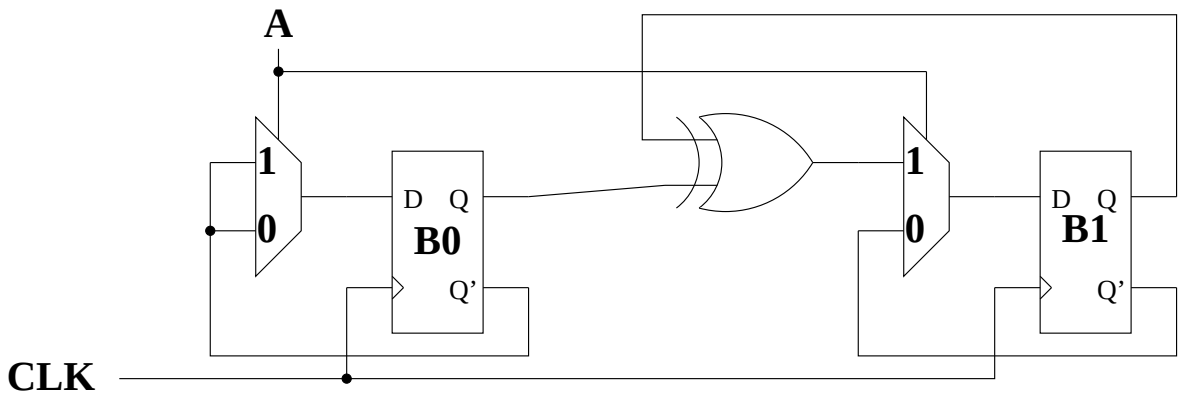

(a) (5 pts) Assume that the initial state is $B1 = 1$ and $B0 = 1$, and that $A = 0$. Fill in the following timing diagram:

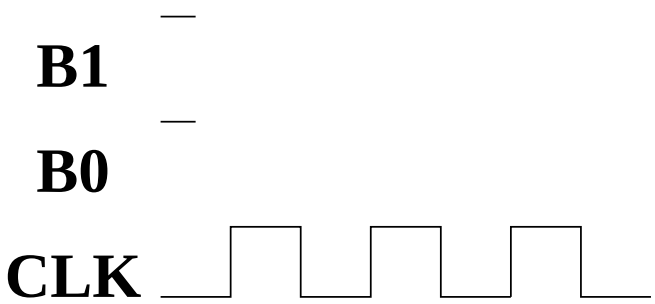

(b) (5 pts) Assume that the initial state is $B1 = 0$ and $B0 = 1$, and that $A = 1$. Fill in the following timing diagram:

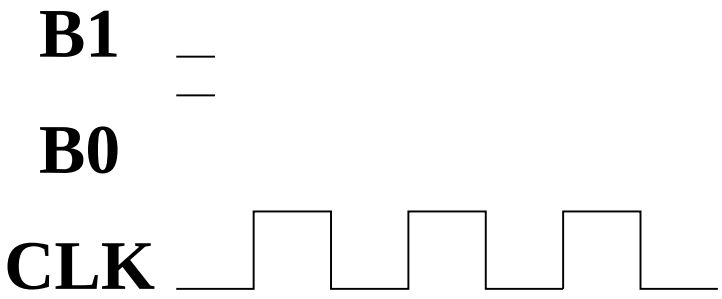

(c) (5 pts) If you interpret $B1, B0$ as a 2-bit number, what mathematical operation(s) does this device perform on each clock cycle?

4. **Memory** (15 pts)

Consider the following circuit:

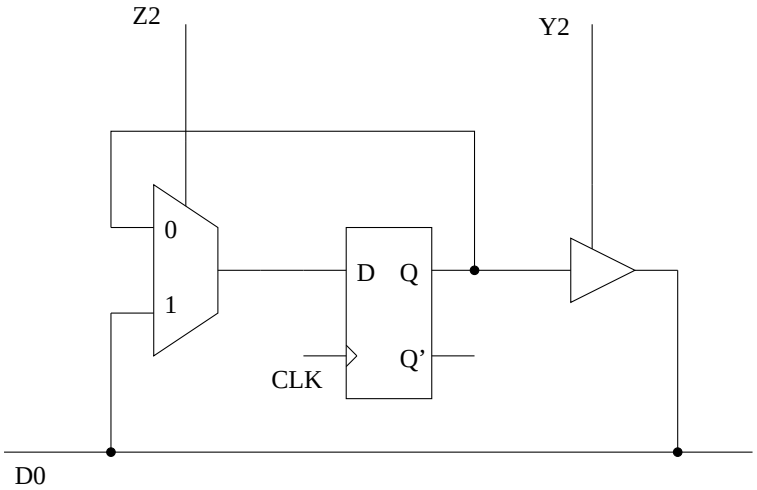

(a) (10 pts) For the timing diagram below, fill in the missing control signals: R/W, Y2, and Z2 (the Y's and Z's for the other bits are not shown below and you do not need to provide them).

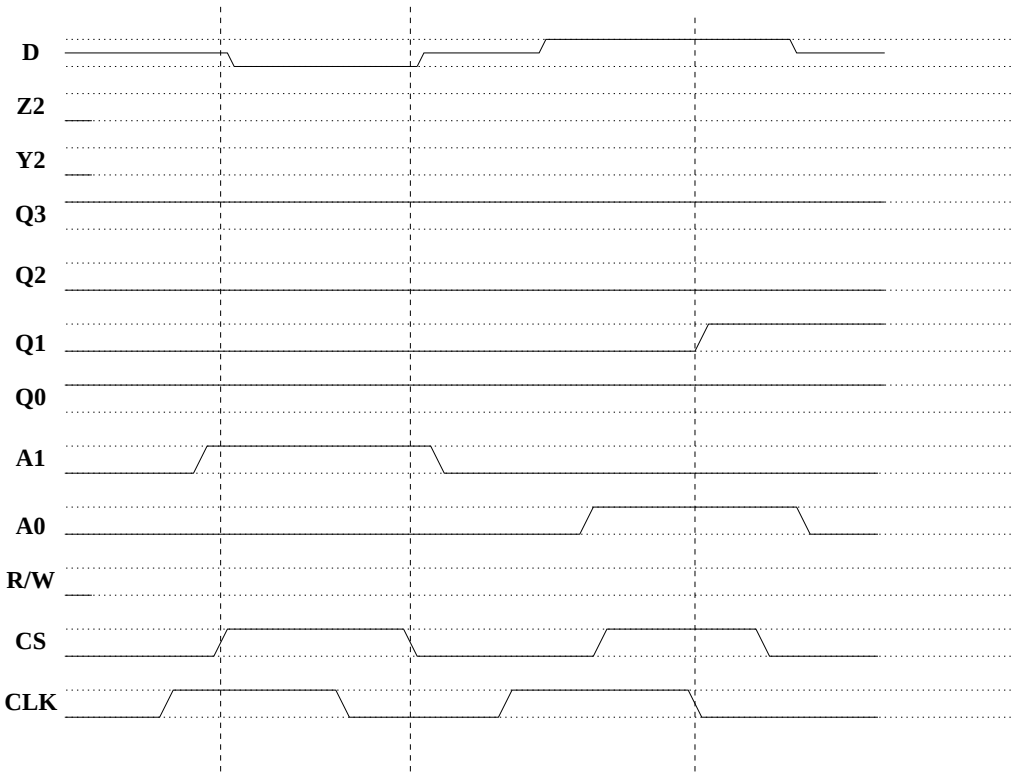

(b) (5 pts) What type of information is stored in RAM in the atmel mega8? (be brief)

5. **Microcontrollers** (25 pts)

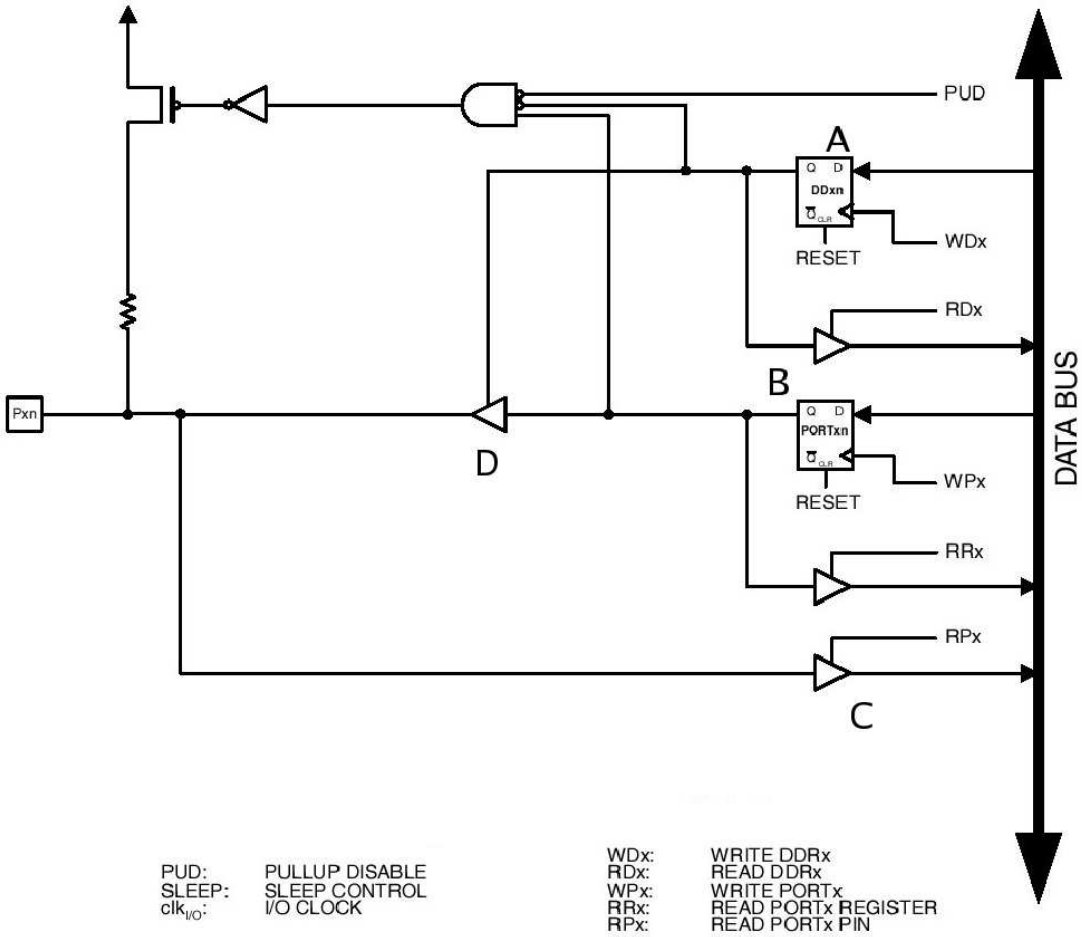

(a) (5 pts) Identify component "D". Briefly explain the function of this component in this circuit.

Assume an initial state of:
$DDRB = 0xC3$
$PORTB = 0xA5$

(b) (5 pts) What effect does the following code have on $DDRB$ and on the above circuit (in terms of components A, B, C, and D)?

```
DDRB = DDRB | 0x40;
```

(c) (5 pts) What effect does the following code have on the state of this circuit (in terms of components A, B, C, and D)?

```
PORTB = PORTB & ~0xC0;
```

(d) (5 pts) What effect does the following code have on the state of this circuit (in terms of components A, B, C, and D)? What is the value of variable "foo" after this line is executed? (be as specific as possible)

```
foo = (PINB & 0x1C) >> 2;
```

(e) (5 pts) When is pin 7 set to a logic low?

```
PORTB |= 0x80;
while(!(PINB & 0x4)) {};
PORTB &= ~0x80;
```