Embedded Real-Time Systems (AME 3623)
Group Quiz Solutions

May 4, 2009

Question 1

Consider the following circuit that contains an atmel processor and a resistor network:

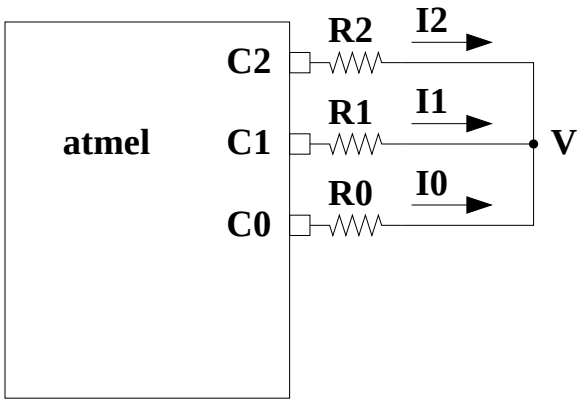

Where:

- C_2, C_1 and C_0 are binary digits that can be set arbitrarily by the atmel processor. The voltage at pin i is $5C_i$.
- $R_i = 2^{2-i} \times R$. For our analysis, consider R as a known variable (although we do not specify it here).
- I_2, I_1 and I_0 are unknown currents.
- V is an unknown voltage.

1. (10pts) What are the 4 equations given by Kirchhoff's current law and Ohm's law?

   $5C_i - V = I_i R_i$ *(for $i \in \{0..2\}$).*

   $\sum_{i=0}^{2} I_i = 0$

2. (20pts) Solve for V as a function of C_2, C_1 and C_0. Show your work.

$$
\begin{aligned}
I_i &= \frac{5C_i - V}{R_i} \\
\sum_{i=0}^{2} \frac{5C_i - V}{R_i} &= 0 \\
\sum_{i=0}^{2} \frac{5C_i}{R_i} &= \sum_{i=0}^{2} \frac{V}{R_i} \\
5\sum_{i=0}^{2} \frac{C_i}{2^{2-i}R} &= V\sum_{i=0}^{2} \frac{1}{2^{2-i}R} \\
5\sum_{i=0}^{2} C_i 2^{i-2} &= V\sum_{i=0}^{2} 2^{i-2} \\
5\sum_{i=0}^{2} C_i 2^{i} &= V\sum_{i=0}^{2} 2^{i} \\
V &= \frac{5}{7}\sum_{i=0}^{2} C_i 2^{i} \\
&= \frac{5}{7}\left(C_0 + 2C_1 + 4C_2\right)
\end{aligned}
$$

3. (10pts) Fill in the following table:

C_2	C_1	C_0	V
0	*0*	*0*	*0*
0	*0*	*1*	*5/7*
0	*1*	*0*	*10/7*
0	*1*	*1*	*15/7*
1	*0*	*0*	*20/7*
1	*0*	*1*	*25/7*
1	*1*	*0*	*30/7*
1	*1*	*1*	*35/7 = 5*

4. (10pts) Assume that C_2, C_1 and C_0 can be interpreted as a 3-bit binary number C (where C_0 is the "1s" digit). Sketch a plot V as a function of C.

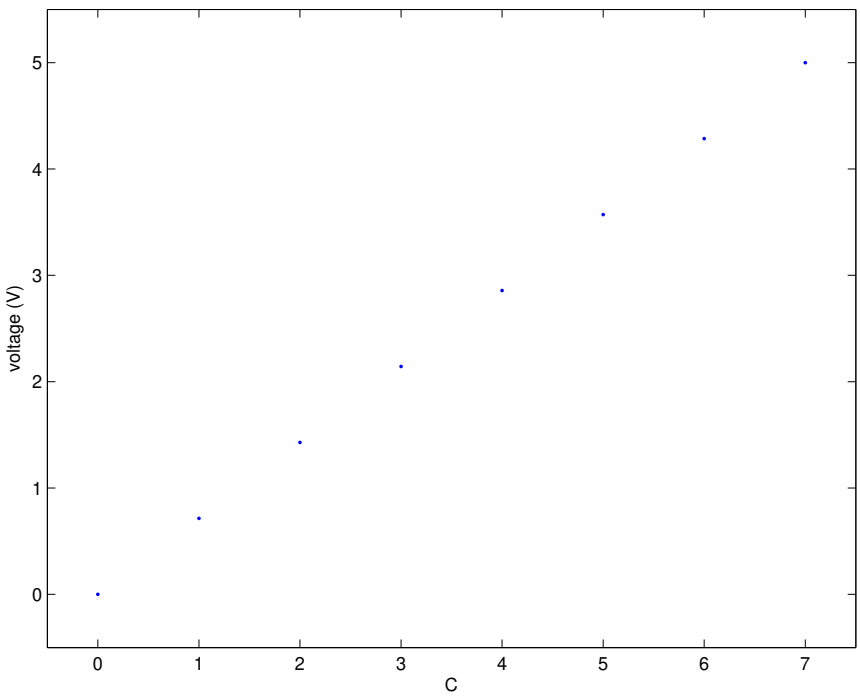

Note: this is a 3-bit digital to analog converter.

Question 2

Consider a keypad and two locked doors with the following properties:

1. The keypad has 4 keys, labeled: 0, 1, 2 and 3
2. Entering the sequence: 2, 1, 3 results in unlocking the left door
3. Entering the sequence: 2, 3, 0 results in unlocking the right door
4. Notes: 1) extraneous button presses should be ignored, and 2) the first occurrence of the above sequences should result in the unlocking of the respective door (i.e., the sequence 2, 3, 2, 1, 3 will unlock the left door as soon as the second 3 is pressed)

We will design a finite state machine that performs this task. Remember that every state must respond to each event in exactly one way.

1. (10 pts) What are the events?

   Pressing 0, 1, 2 and 3

2. (10 pts) What are the actions?

   Unlock left (L)

   Unlock right (R)

   Nothing (Z)

3. (20 pts) Show the states and transitions. Label the transitions with events and actions.

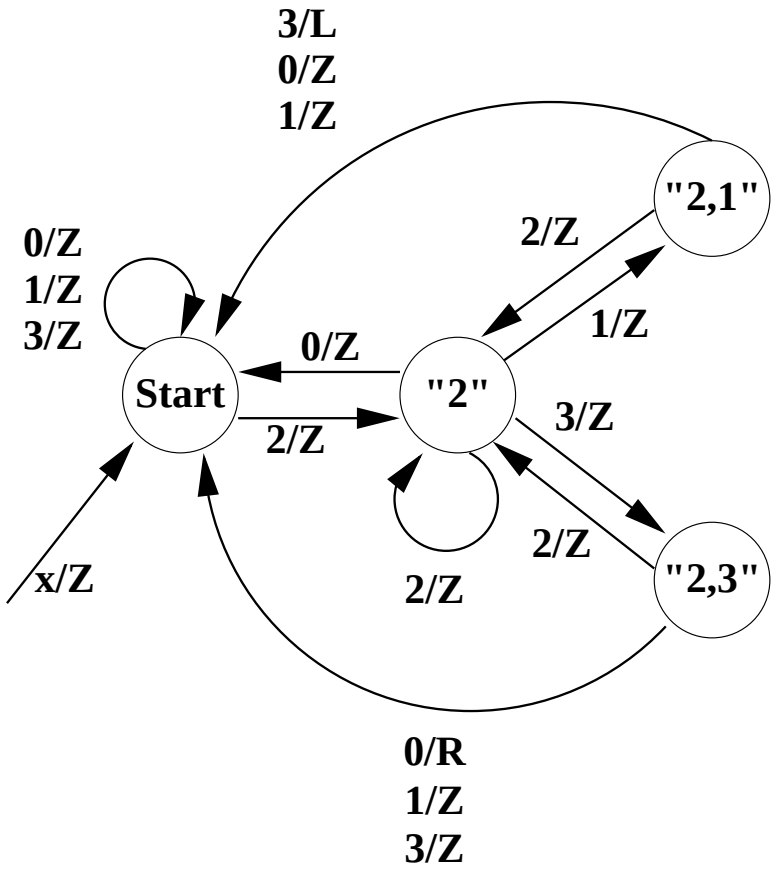

Question 3

Consider the following inverted pendulum:

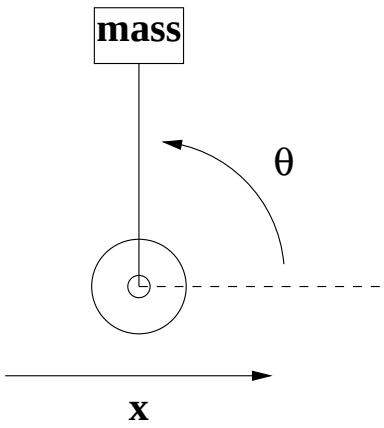

A *bang-bang* controller produces motor commands (in this case, velocity motor commands) depending on the orientation of the pendulum:

$$\dot{x} = \begin{cases} U & \text{if } \theta_g - \theta \geq \epsilon \\ -U & \text{if } \theta_g - \theta \leq -\epsilon \\ 0 & \text{otherwise} \end{cases}$$

where U and $\epsilon > 0$ are constants that you can assume are selected properly.

Assume that the controller performs accordingly:

- The vehicle (or base) will not move if the pendulum is within $\pm\epsilon$ of vertical ($\theta = 90^o$)
- If the pendulum is leaning forward ($\theta < 90 - \epsilon$), the vehicle will react by quickly moving forward so as to bring the mass underneath the center of rotation.
- If the pendulum is leaning backwards, the vehicle will react by moving backwards.

Now, suppose that we have a desired x_g to which we want to move the vehicle without dropping the pendulum (our goal is for x to be within $x_g \pm \gamma$). Furthermore, once the vehicle is within this goal region, we want it to maintain its position.

Problem: design a finite state machine to solve this problem. The FSM will act as a "high level" controller, whereas the bang-bang controller will be responsible for the low-level details of keeping the pendulum balanced.

Note: by choosing $\theta_g = 80^o$, we will cause the bang-bang controller to first move the vehicle backward until the mass begins to fall and then to move the vehicle forward to catch up to the falling mass. This sequence will be repeated with a net effect of translating forward. Thus, assume that you have the following 3 actions: $\theta_g = 80^o$, $\theta_g = 90^o$, $\theta_g = 100^o$.

1. (10 pts) What are the 4 events?

   $x > x_g + \gamma$

   $x \leq x_g + \gamma$

   $x < x_g - \gamma$

   $x \geq x_g - \gamma$

2. (10 pts) What are the 3 states?

   "Happy"

   Need to be forward

   Need to be backward
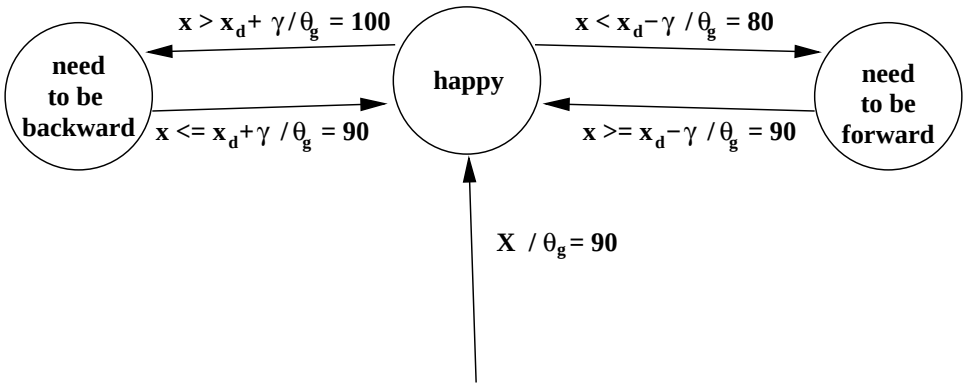
3. (20 pts) Show the states and transitions. Label the transitions with events and actions.